DUST COLLECTORS

DF 075
DUST COLLECTOR

Watch the video!

POWER
0,75 kW - 1 HP

APPLICATION
Volatile and suspended powders

CAPACITY
65 Lt

FEATURES

- Very high air flow rates for suspended dust
- High filtration capacity and efficiency
- Sturdy painted steel construction
- Suction arm available (also Atex certified)

HIGHLIGHTS

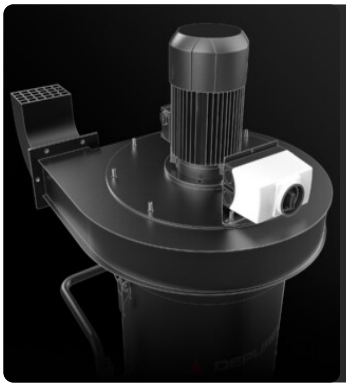

SUCTION UNIT

The suction is generated by a specially designed electric fan to ensure the best air flow rate while maintaining a good level of water lift.

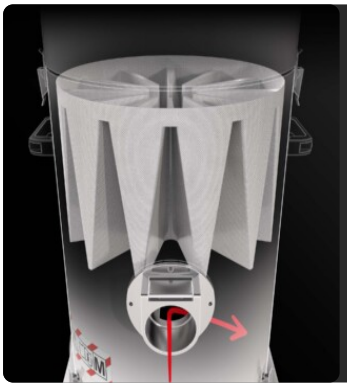

FILTER UNIT

The material is diverted by a deflector protecting the main filter. Filtration is ensured by a class M polyester star filter (filtration efficiency 1 micron) with high filtering surface area, which guarantees air passage even with the dirty filter.

FILTER CLEANING SYSTEM

An ergonomic manual filter shaker allows the filter to be cleaned easily and quickly, removing dust and debris from the surface of the filter.

COLLECTION UNIT

The material is collected inside a coated container complete with a handle that allows its release. Thanks to the 4 sturdy pivoting wheels, the container can be moved with ease, and the collected material can then be disposed of.

TECHNICAL DATA

MOTOR

Typologies	Electric Fan
Power	0,75 kW - 1 HP
Frequency	50/60 Hz
Voltage	400 V
Maximum vacuum mmH20	185 | 200 | 180 mmH2O
Static depression level	180 | 192 | 170 mmH2O
Maximum air flow	300 | 600 | 800 m3/h
Insulation class	55 | F IP
Noise level	70 dB(A)

MACHINE

Suction inlet	70 | 100 | 120 Ø mm
Collection system	Steel container
Capacity	65 Lt
Dimensions	660 x 800 mm
Height	1630 mm
Weight	110 Kg

FILTRATION

Primary filter type	Star
Filter surface	24000 cm2
EN 60335-2-69 filtration class	M
Media	Polyester
Filter Cleaning System	Manual

FEATURES

PUSH HANDLE

PLUG
4-pole industrial plug

POWER SUPPLY CABLE

WHEEL WITH BRAKE
Non-marking wheel with integrated brake

WHEELS
Non-marking pivoting wheels

STEEL CONSTRUCTION
Rugged industrial coated steel construction

OPTIONS

AVAILABLE FILTER CLEANING SYSTEMS

SP
Automatic reverse jet cleaning system
Antistatic M class filter (EN 60335-2-69), 3
Polyester filter cartridges, 9 m² filter surface

AVAILABLE FILTER MEDIA

HEPA 13
Absolute filter (EN 1822)
35.000 cm² filter surface
H13 Class Filter (EN 1822)
Glass fiber

PTFE ANT
Antistatlc PTFE filter (M class EN 60335-2-69)

PTFE
PTFE Filter (M class EN 60335-2-69)

NOMEX
250° Celsius resistant filter

BFL
M class filter 38.000 cm ²

ANT M
Antistatic filter (M class EN 60335-2-69)

ACB
Active carbon filter

STRUCTURE AND OPTIONS

60HZ
Available in 60Hz version

3 YEARS WARRANTY
Purchasing the replacement filter along with the vacuum

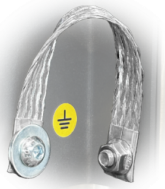

GRD
Grounding

BX
Stainless steel bin AISI 304

GX
Stainless steel bin and chamber AISI 304

TX
Stainless steel bin, chamber and frame AISI 304

100 LT
100 Lt bin

SPARK TRAP
Built to capture sparks produced during welding, sanding, or polishing operations on metal parts

ACCESSORIES

P12336
SUCTION ARM Ø 160MM/L 3M
160mm diameter suction arm jointed in three parts for a total length of 3 metres, equipped with an articulated hood and valve for adjusting ...

P12300/200
FLANGED REDUCTION FOR HOSE Ø 200MM
Coupling flange on DF industrial vacuum for 200 mm diameter flexible hose

P12300/180
FLANGED REDUCTION FOR HOSE Ø 180MM
Coupling flange on DF industrial vacuum for 180 mm diameter flexible hose

P12300/150
FLANGED REDUCTION FOR HOSE Ø 150MM
Coupling flange on DF industrial vacuum for 150 mm diameter flexible hose

P12300/120
FLANGED REDUCTION FOR HOSE Ø 120MM
Coupling flange on DF industrial vacuum for 120 mm diameter flexible hose

P12300/100
FLANGED REDUCTION FOR HOSE Ø 100MM
Coupling flange on DF industrial vacuum for 100 mm diameter flexible hose

P12334
FLANGED REDUCTION FOR ARM Ø 160MM
Coupling flange on DF industrial vacuum for 160 mm diameter flanged arm