DUST COLLECTORS

DF 22 SP

INDUSTRIAL DUST COLLECTOR WITH AUTOMATIC FILTER CLEANING

Watch the video!

POWER
2,2 kW - 3 HP

APPLICATION
Volatile and suspended powders

CAPACITY
65 Lt

FEATURES

- Very high air flow for suspended dust
- Automatic filter cleaning for greater working autonomy
- Built-in SP automatic filter cleaning system
- Suction arm available (also Atex)

HIGHLIGHTS

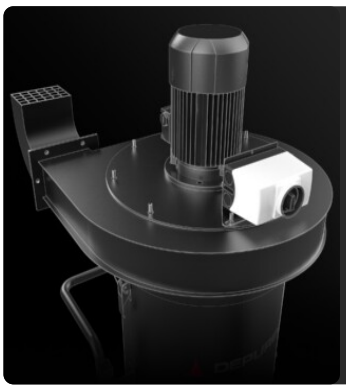

SUCTION UNIT

The suction is generated by a specially designed electric fan to ensure the best air flow rate while maintaining a good level of water lift.

FILTER UNIT

Filtration is ensured by polyester cartridge filters in class M (filtration efficiency 1 micron) with high filtering surface area, which guarantees the passage of air even with dirty filter.

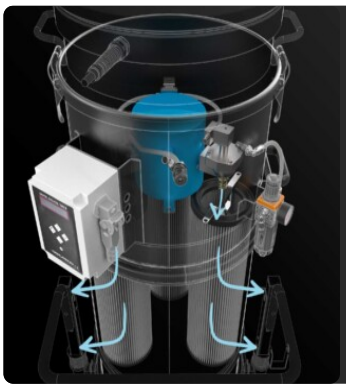

SP FILTER CLEANING SYSTEM

Automatic filter cleaning system in reverse flow of air at 6 bar (compressed air not supplied as standard). Each filter is cleaned at regular, adjustable intervals alternately without interrupting suction. Ideal for fine and difficult dust.

COLLECTION UNIT

The material is collected inside a coated container complete with a handle that allows its release. Thanks to the 4 sturdy pivoting wheels, the container can be moved with ease, and the collected material can then be disposed of.

TECHNICAL DATA

MOTOR

Typologies	Electric Fan
Power	2,2 kW - 3 HP
Frequency	50/60 Hz
Voltage	400 V
Maximum vacuum mmH20	350 | 350 | 350 mmH2O
Static depression level	340 | 320 | 280 mmH2O
Maximum air flow	800 | 1000 | 1400 m3/h
Insulation class	55 | F IP
Noise level	73 dB(A)

MACHINE

Suction inlet	100 | 120 | 150 Ø mm
Collection system	Steel container
Capacity	65 Lt
Dimensions	660 x 800 mm
Height	1980 mm
Weight	120 Kg

FILTRATION

Primary filter type	3x Cartridges
Filter surface	90000 cm2
EN 60335-2-69 filtration class	M
Media	Antistatic polyester
Filter Cleaning System	Automatic SP

FEATURES

PUSH HANDLE

PLUG
4-pole industrial plug

POWER SUPPLY CABLE

WHEEL WITH BRAKE
Non-marking wheel with integrated brake

WHEELS
Non-marking pivoting wheels

STEEL CONSTRUCTION
Rugged industrial coated steel construction

OPTIONS

AVAILABLE FILTER MEDIA

ACB
Active carbon filter

STRUCTURE AND OPTIONS

60HZ
Available in 60Hz version

3 YEARS WARRANTY
Purchasing the replacement filter along with the vacuum

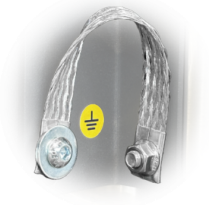

GRD
Grounding

GX
Stainless steel bin and chamber AISI 304

BX
Stainless steel bin AISI 304

100 LT
100 Lt bin

SPARK TRAP
Built to capture sparks produced during welding, sanding, or polishing operations on metal parts

ACCESSORIES

P12336
SUCTION ARM Ø 160MM/L 3M
160mm diameter suction arm jointed in three parts for a total length of 3 metres, equipped with an articulated hood and valve for adjusting ...

P12300/200
FLANGED REDUCTION FOR HOSE Ø 200MM
Coupling flange on DF industrial vacuum for 200 mm diameter flexible hose

P12300/180
FLANGED REDUCTION FOR HOSE Ø 180MM
Coupling flange on DF industrial vacuum for 180 mm diameter flexible hose

P12300/150
FLANGED REDUCTION FOR HOSE Ø 150MM
Coupling flange on DF industrial vacuum for 150 mm diameter flexible hose

P12300/120
FLANGED REDUCTION FOR HOSE Ø 120MM
Coupling flange on DF industrial vacuum for 120 mm diameter flexible hose

P12300/100
FLANGED REDUCTION FOR HOSE Ø 100MM
Coupling flange on DF industrial vacuum for 100 mm diameter flexible hose

P12334
FLANGED REDUCTION FOR ARM Ø 160MM
Coupling flange on DF industrial vacuum for 160 mm diameter flanged arm