TRAMOGGIA CICLONICA 600

CYCLONIC HOPPER WITH LOCALIZED DISCHARGE

APPLICATION
Fine, dry and clogging powders

COLLECTION SYSTEM
Localized discharge

FEATURES

- Easily integrated
- Suction with integrated cyclonic effect
- Various material discharge systems available
- Effectively protects your suction and filtration system

HIGHLIGHTS

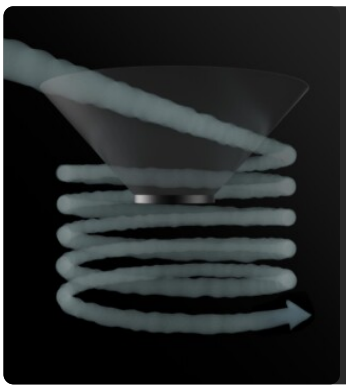

CYCLONIC EFFECT

The tangential inlet facilitates the deposition of the sucked material due to the cyclonic effect.

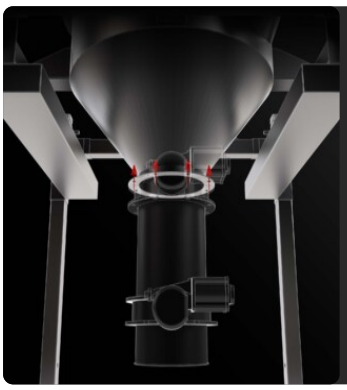

CUSTOM EXHAUST SYSTEM

A specific discharge system, intermittent or continuous, can be installed depending on operational needs.

TECHNICAL DATA

MACHINE

Intake suction inlet	100
Outlet suction inlet	100 Ø mm
Collection system	Conveyed discharge
Capacity	600 Lt
Dimensions	900 x 900 mm
Height	1810 mm

OPTIONS

STRUCTURE AND OPTIONS

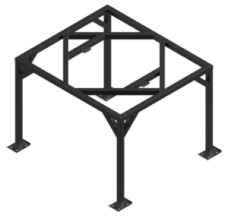

STR
Four legs to discharge in big bag

DISCHARGE WITH COUNTERBALANCED FLAP
The material is automatically discharged every time suction is stopped.

DISCHARGE WITH BUTTERFLY VALVE
Manual intermittent discharging system with butterfly valve
Manual discharging butterfly valve

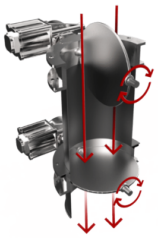

DOUBLE PNEUMATIC DISCHARGE WITH BUTTERFLY VALVES
System with valves that open alternately to allow the material to be discharged and the vacuum to be maintained at the same time.
Double electro pneumatic discharging butterfly valve ATEX

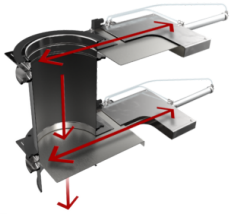

DOUBLE DISCHARGE WITH ELECTRO-PNEUMATIC DAMPERS
System with dampers that open alternately to allow the material to be discharged and the vacuum to be maintained at the same time.

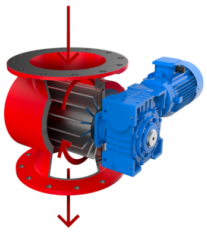

ROTARY VALVE FOR CONTINUOUS DISCHARGE
The valve rotates continuously allowing a constant and uniform discharge of the aspirated material.
Rotary valve for continuous hopper discharge

ROTARY LEVEL SENSOR
Sensor with rotating paddle that sends a signal when the container is full to immediately stop suction