ATEX AND ACD VACUUM CLEANERS

DF 22 DEX 3/3G

ATEX ZONE 2 CERTIFIED INDUSTRIAL DUST COLLECTOR

POWER
2,2 kW - 3 HP

APPLICATION
Volatile and suspended powders

CAPACITY
65 Lt

FEATURES

- Suitable and safe for vacuuming suspended dust in Atex 2 zones
- Atex-certified fan
- Extremely high airflow
- High filtration efficiency with complete grounding of the unit

HIGHLIGHTS

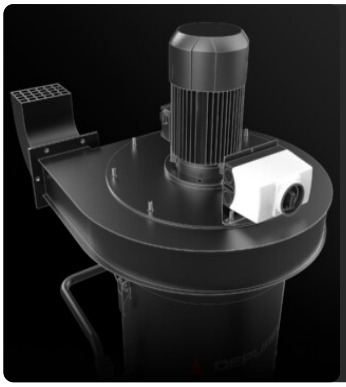

SUCTION UNIT

Suction is generated by an Atex-certified electric fan specially designed to ensure the best air flow rate while maintaining a good vacuum level.

FILTER UNIT

Filtration is provided by a polyester star filter in class M (filtration efficiency 1 micron) with a high filtering surface area, which guarantees the passage of air even with a dirty filter.

FILTER CLEANING SYSTEM

An ergonomic manual filter shaker allows the filter to be cleaned easily and quickly, removing dust and debris from the surface of the filter.

COLLECTION UNIT

The material is collected inside an AISI 304 stainless steel container, complete with a metal handle that allows its release, to avoid any sparks that could be generated by the electrostatic charge.

TECHNICAL DATA

MOTOR

Typologies	Atex 3G fan
Power	2,2 kW - 3 HP
Frequency	50/60 Hz
Voltage	400 V
Maximum vacuum mmH20	350 | 350 | 350 mmH2O
Static depression level	340 | 320 | 280 mmH2O
Maximum air flow	800 | 1000 | 1400 m3/h
Insulation class	55 | F IP
Noise level	73 dB(A)

MACHINE

Atex marking	II 3/3 G Ex h IIB T3 Gc/Gc
EX category	3/3G
Operating temperature	-20/+40 C°
Suction inlet	100 | 120 | 150 Ø mm
Collection system	AISI304 stainless steel container
Capacity	65 Lt
Dimensions	660 x 800 mm
Height	1630 mm
Weight	110 Kg

FILTRATION

Primary filter type	Star
Filter surface	24000 cm2
EN 60335-2-69 filtration class	M
Media	Antistatic polyester
Filter Cleaning System	Manual

FEATURES

THIRD PARTY ATEX CERTIFICATION

DRY TYPE VACUUM CLEANER
Atex-certified vacuum cleaner with dry dust filtration, as per EN17348

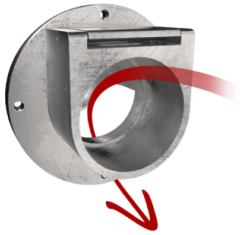

DEFLECTOR
Internal deflector to protect the filter

PUSH HANDLE

4-PIN ATEX INDUSTRIAL PLUG

ANTISTATIC FILTRATION
Antistatic filtration to discharge static energy

POWER SUPPLY CABLE

WHEEL WITH BRAKE
Non-marking wheel with integrated brake

WHEELS
Non-marking pivoting wheels

STEEL CONSTRUCTION
Rugged industrial coated steel construction

GRD
Grounding

BX
Stainless steel bin AISI 304

OPTIONS

AVAILABLE FILTER MEDIA

HEPA 13
Absolute filter (EN 1822)
110.000 cm² filter surface
H14 Class Filter (EN 1822)
Glass fiber

PTFE ANT
Antistatlc PTFE filter (M class EN 60335-2-69)

AVAILABLE FILTER CLEANING SYSTEMS

PSC
Semiautomatic pneumatic filter shaker

STRUCTURE AND OPTIONS

60HZ
Available in 60Hz version

3 YEARS WARRANTY
Purchasing the replacement filter along with the vacuum

SLN
Silencer + diffusor

GX
Stainless steel bin and chamber AISI 304

100 LT
100 Lt bin

ACCESSORIES

P12370
ATEX CERTIFIED STAINLESS STEEL SUCTION ARM Ø 150MM/ L 3M
150mm diameter suction arm jointed in three parts for a total length of 3 metres. Construction in AISI 316 stainless steel, completely condu ...

P12300/100
FLANGED REDUCTION FOR HOSE Ø 100MM
Coupling flange on DF industrial vacuum for 100 mm diameter flexible hose

P12300/120
FLANGED REDUCTION FOR HOSE Ø 120MM
Coupling flange on DF industrial vacuum for 120 mm diameter flexible hose

P12300/150
FLANGED REDUCTION FOR HOSE Ø 150MM
Coupling flange on DF industrial vacuum for 150 mm diameter flexible hose